MULTI-POINT LOCKS – *2 & 3 POINT*

311-A DOOR LOCK KIT

- Steel construction/zinc finish
- (1) 311 center control w/override
- (1) 111 36” round rod
- (1) 111 48” round rod
- (2) 211 rod guides
- (1) Washer kit
- (1) Inside handle
- (1) Anti-rattle spring
- Accepts 1/2” square shank
- ✓ **Available with 5/8” square shank hole**
- ✓ **Available without override**
- ♦ **Use with 111-A or 111-C handles**

311-B DOOR LOCK KIT

- Steel construction/zinc finish
- (1) 311 center control w/override
- (1) 311 36” flat rod
- (1) 311 48” flat rod
- (2) 311 bolts
- Accepts 1/2” square shank
- ✓ **Available with 5/8” square shank hole**
- ✓ **Available with round holes**
- ✓ **Available with slamming option (specify 311-AH)**
- ✓ **Available without override**
- ✓ **Available with round rod & bolt combination (See FIG. 1)**

311A-KIT

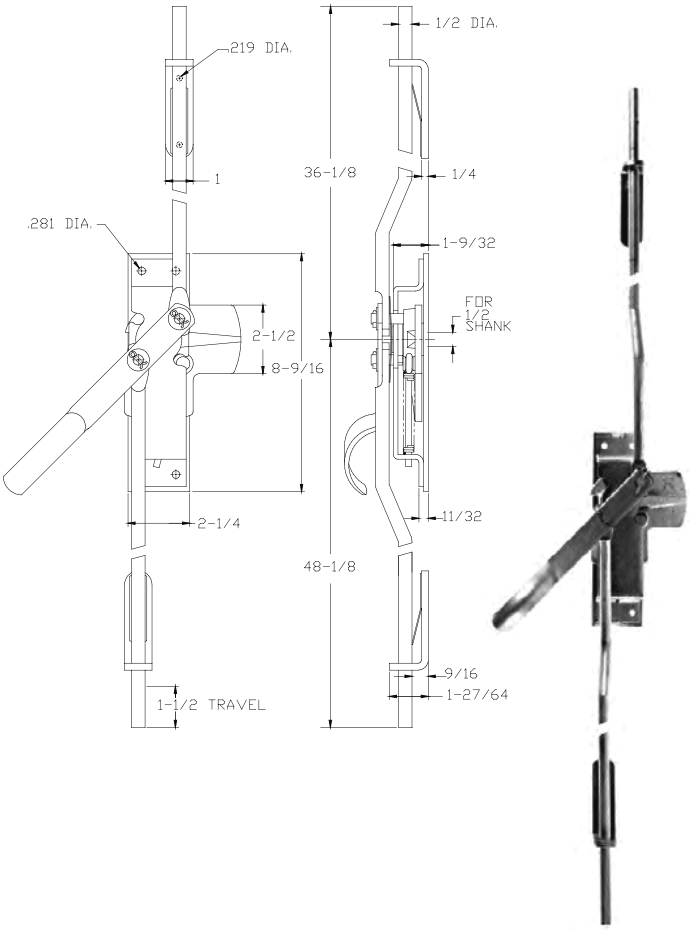

311B-KIT

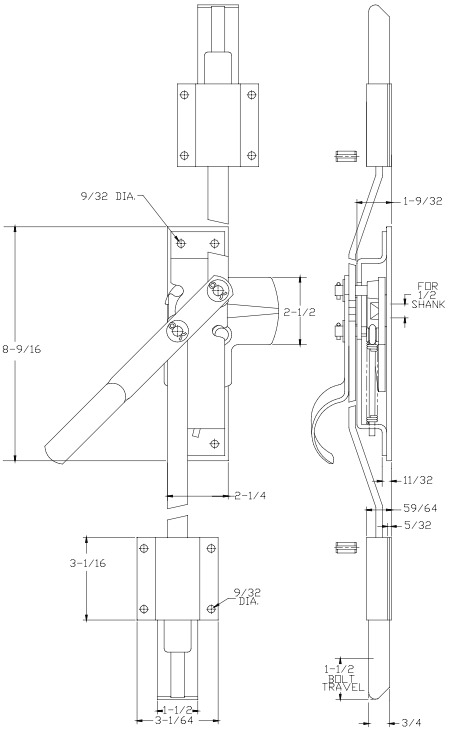
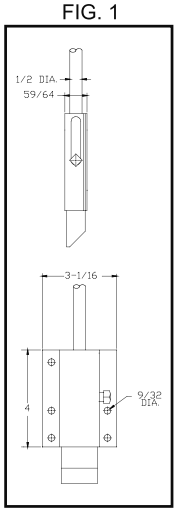
FIG. 1